Micro-controller and Flash Memory Circuits

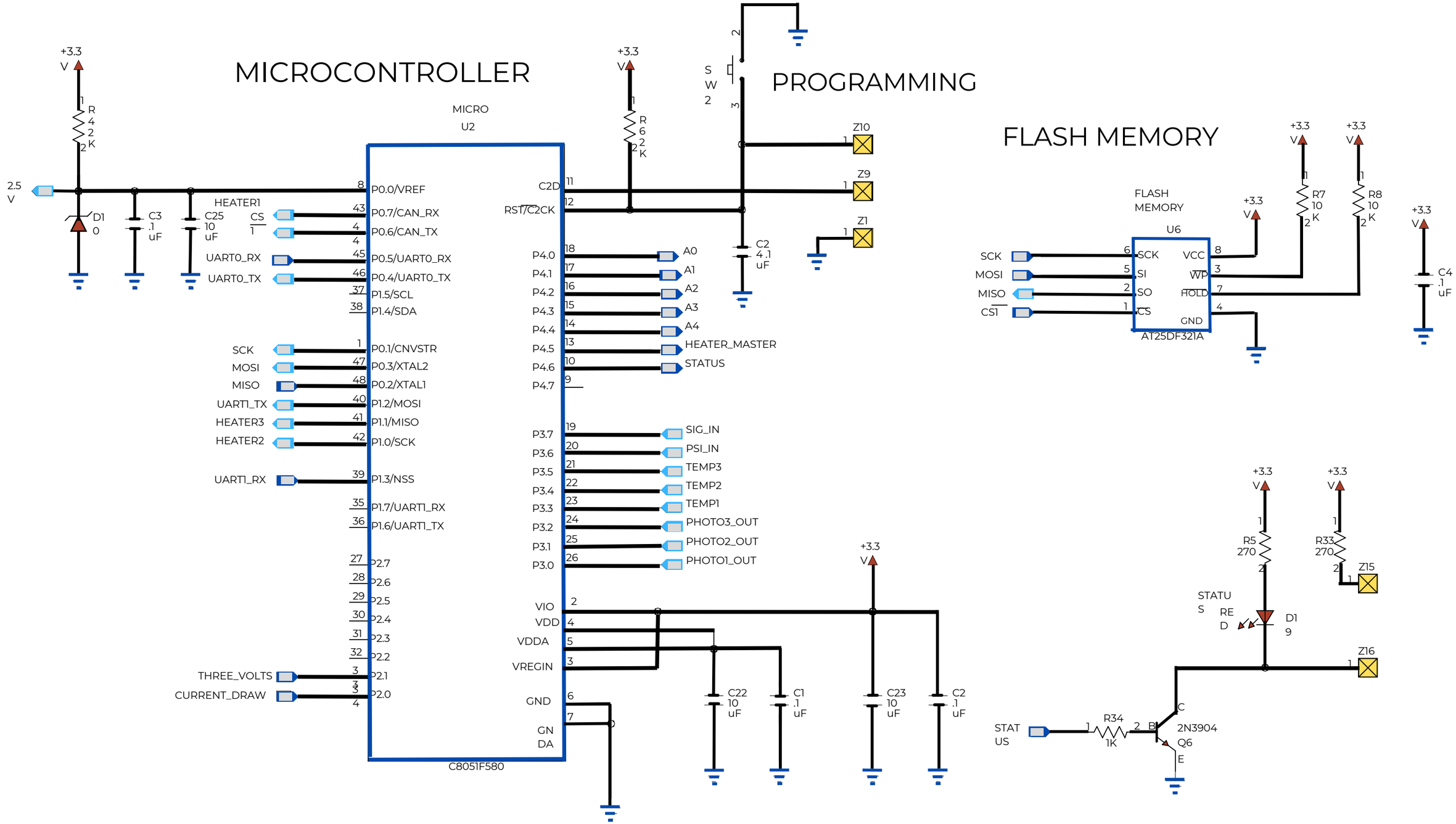

NASA-HASP Project

Circuit diagram developed and improved by students team

Global Positioning System (GPS) Circuit

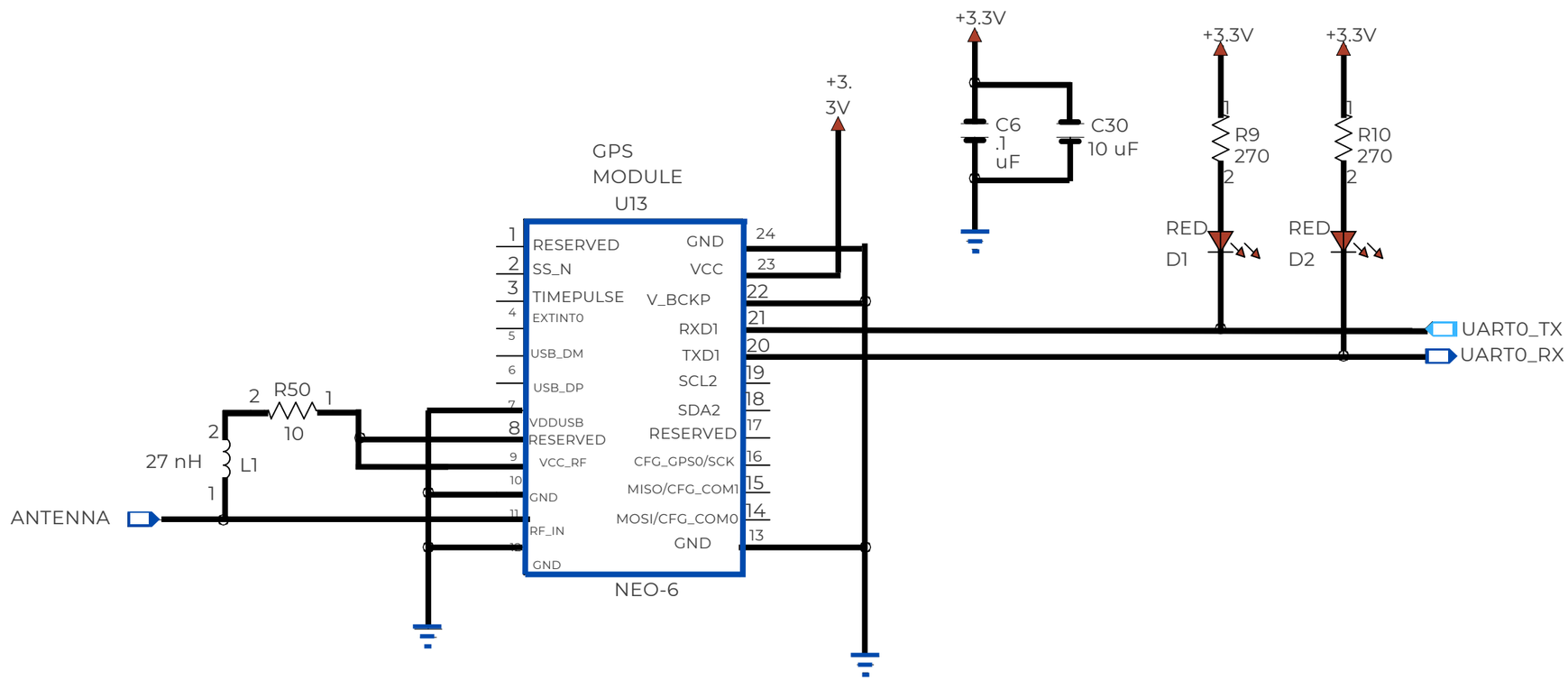

NASA-HASP Project

Circuit diagram developed and improved by students team

Multiplexer Circuit

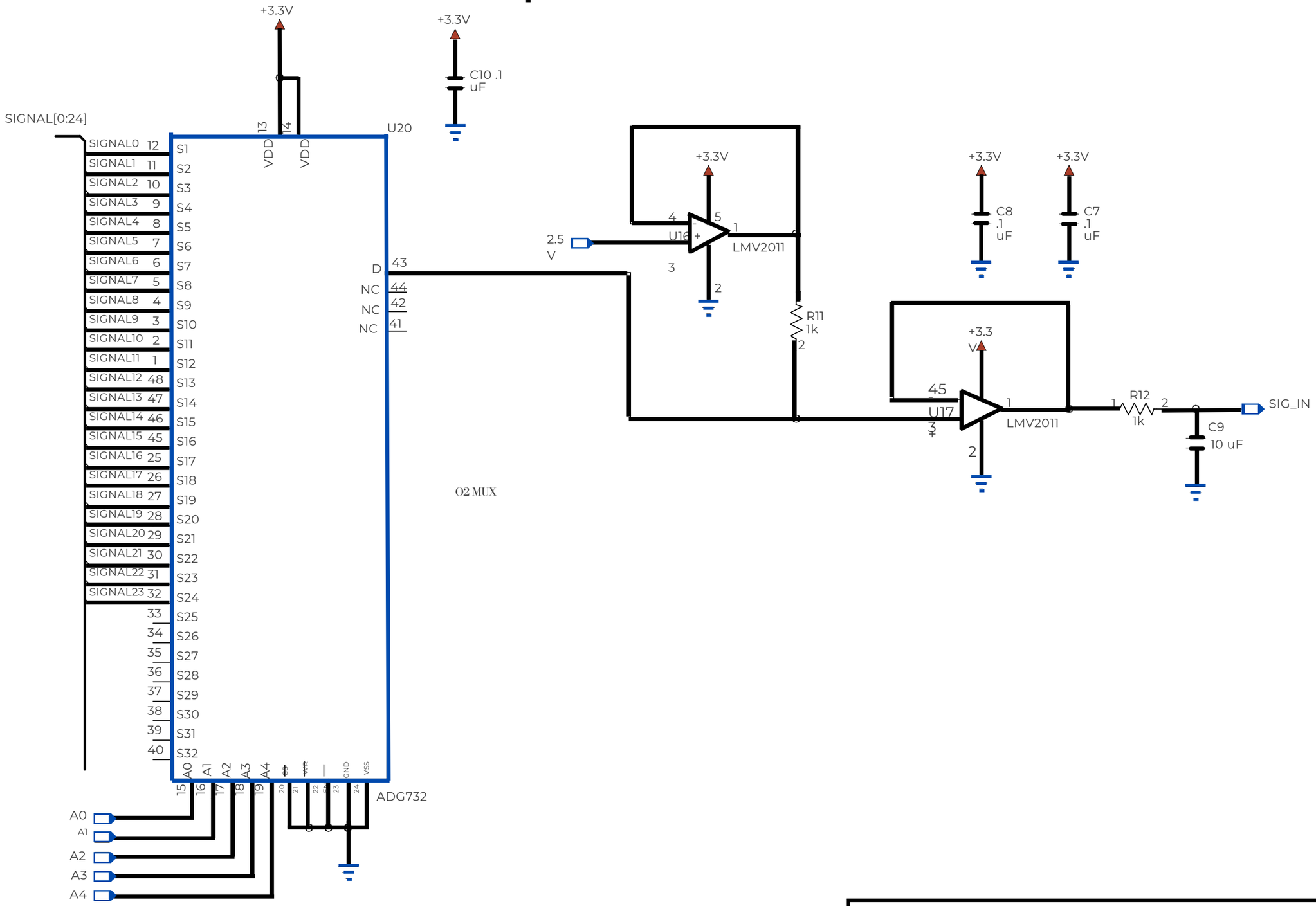

NASA-HASP Project

Circuit diagram developed and improved by students team

Voltage Regulation Circuit

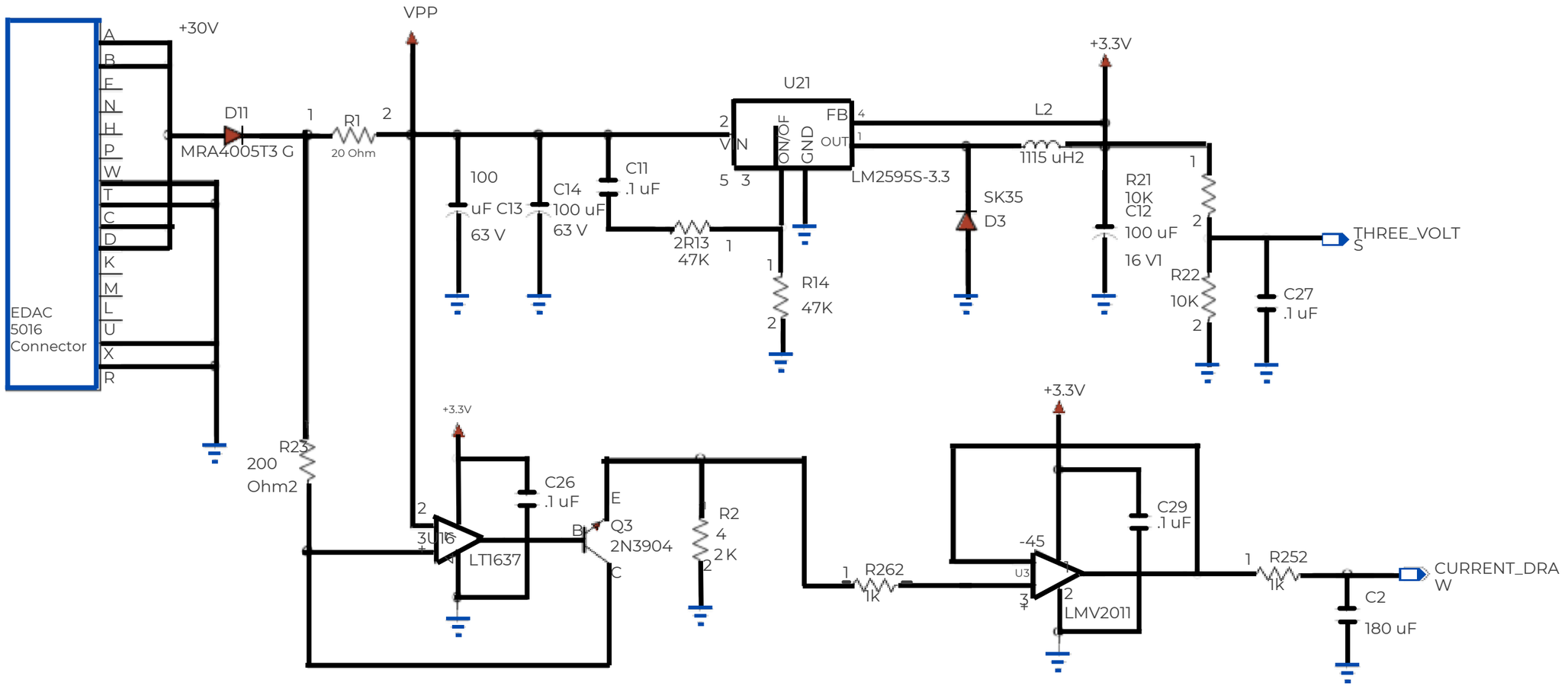

UNF-UND

NASA-HASP Project

Circuit diagram developed and improved by students team

Heater Circuits for Three O3 Sensors Box and Pressure Sensor Circuits

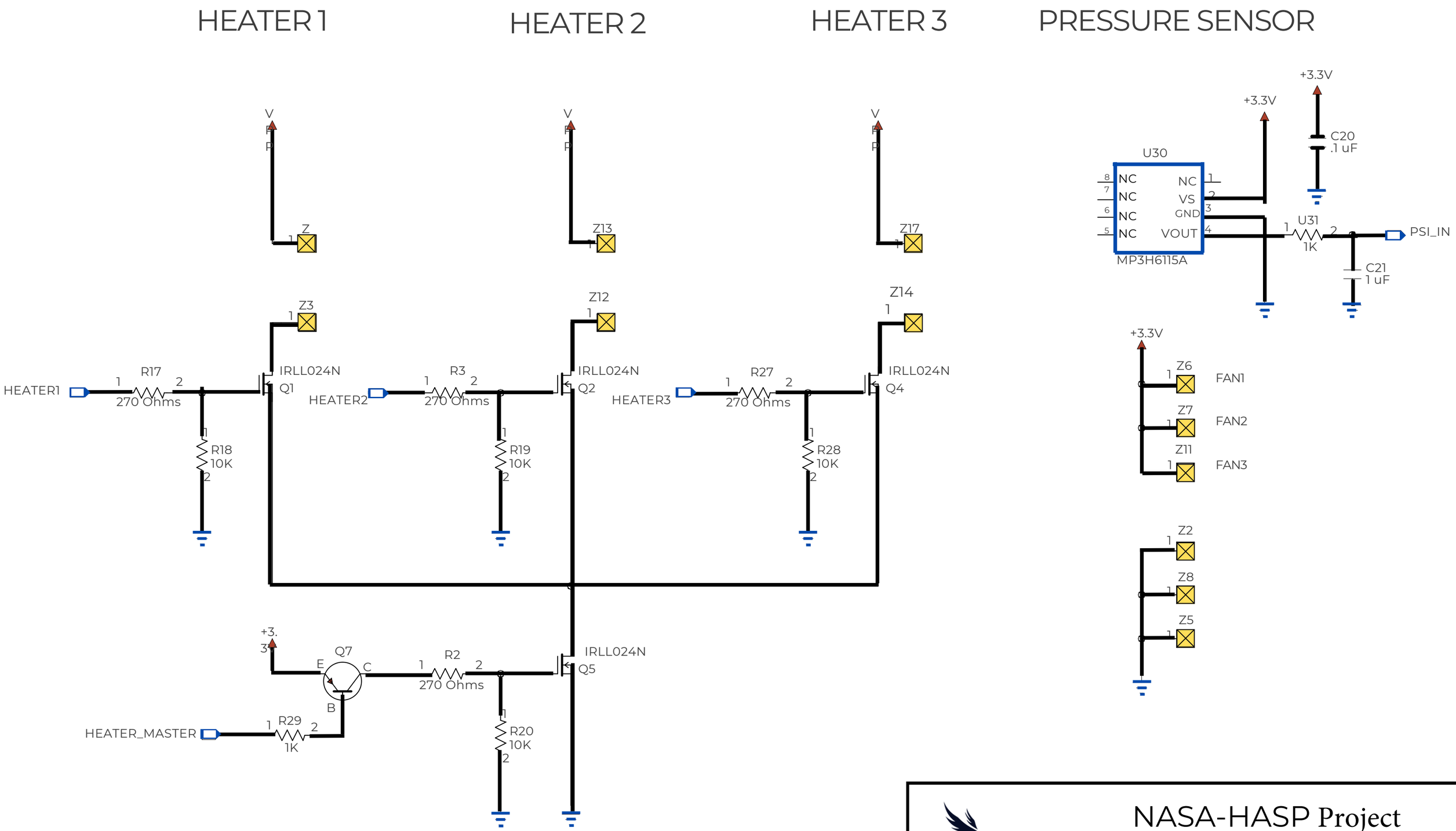

UNF-UND

NASA-HASP Project

Circuit diagram developed and improved by students team

RS232 Circuits

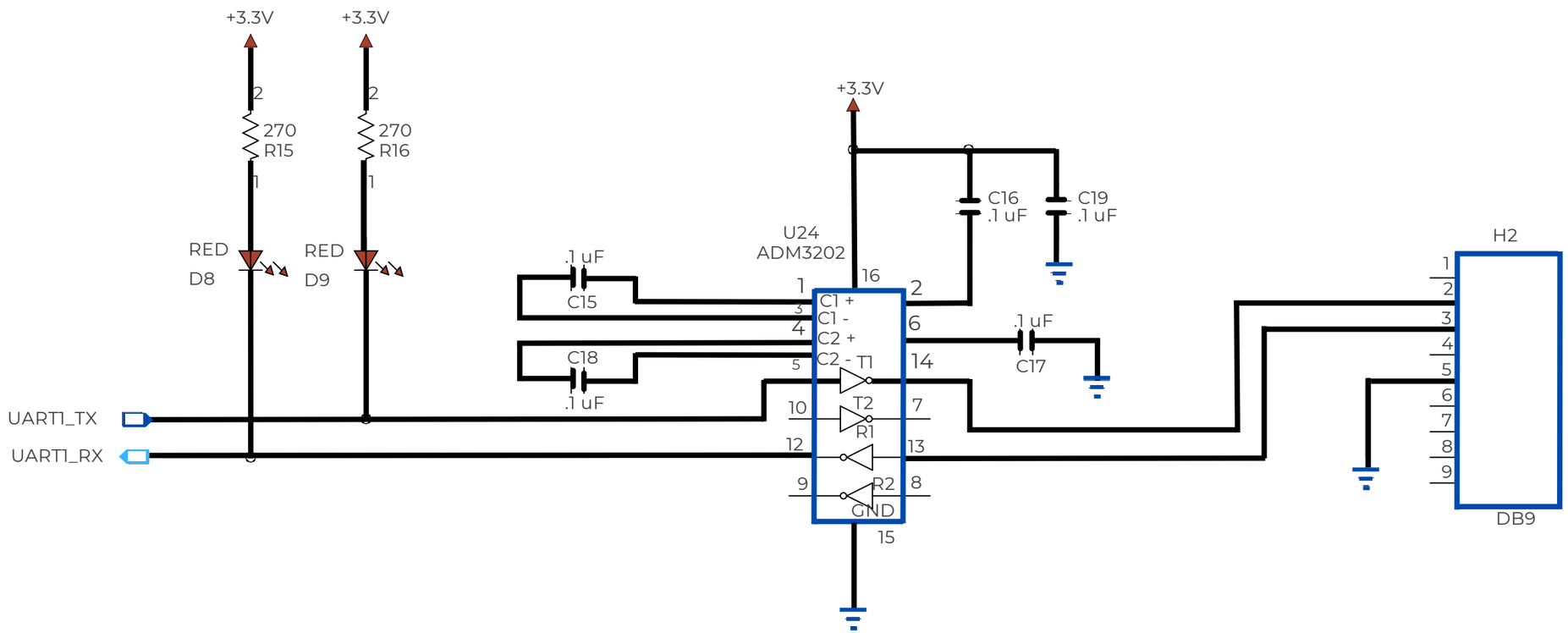

NASA-HASP Project

Circuit diagram developed and improved by students team

Three Ozone Sensor Boxes and UV Light Sensor Circuits

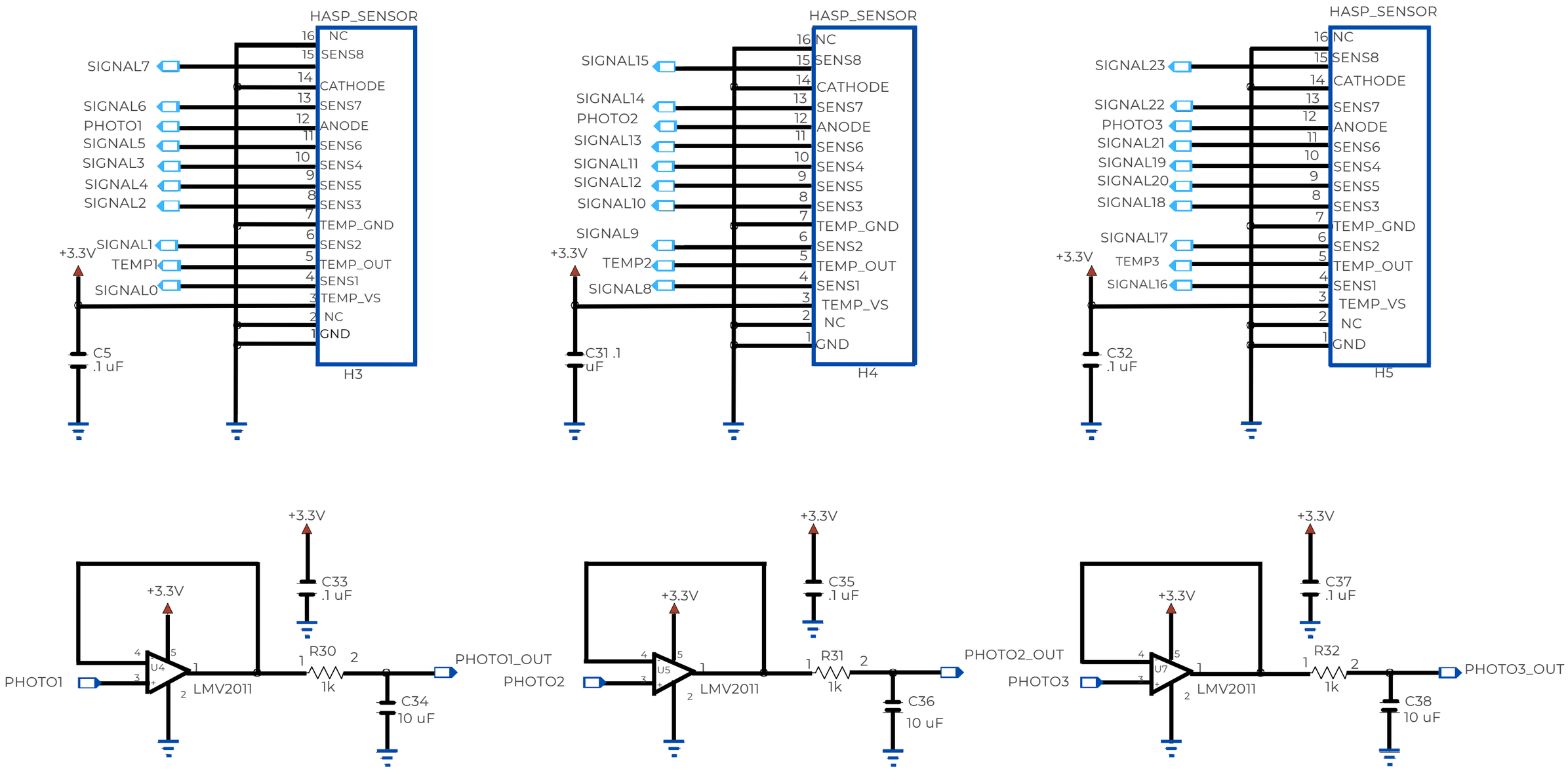

UNF-UND

NASA-HASP Project

Circuit diagram developed and improved by students team