Small L Bracket

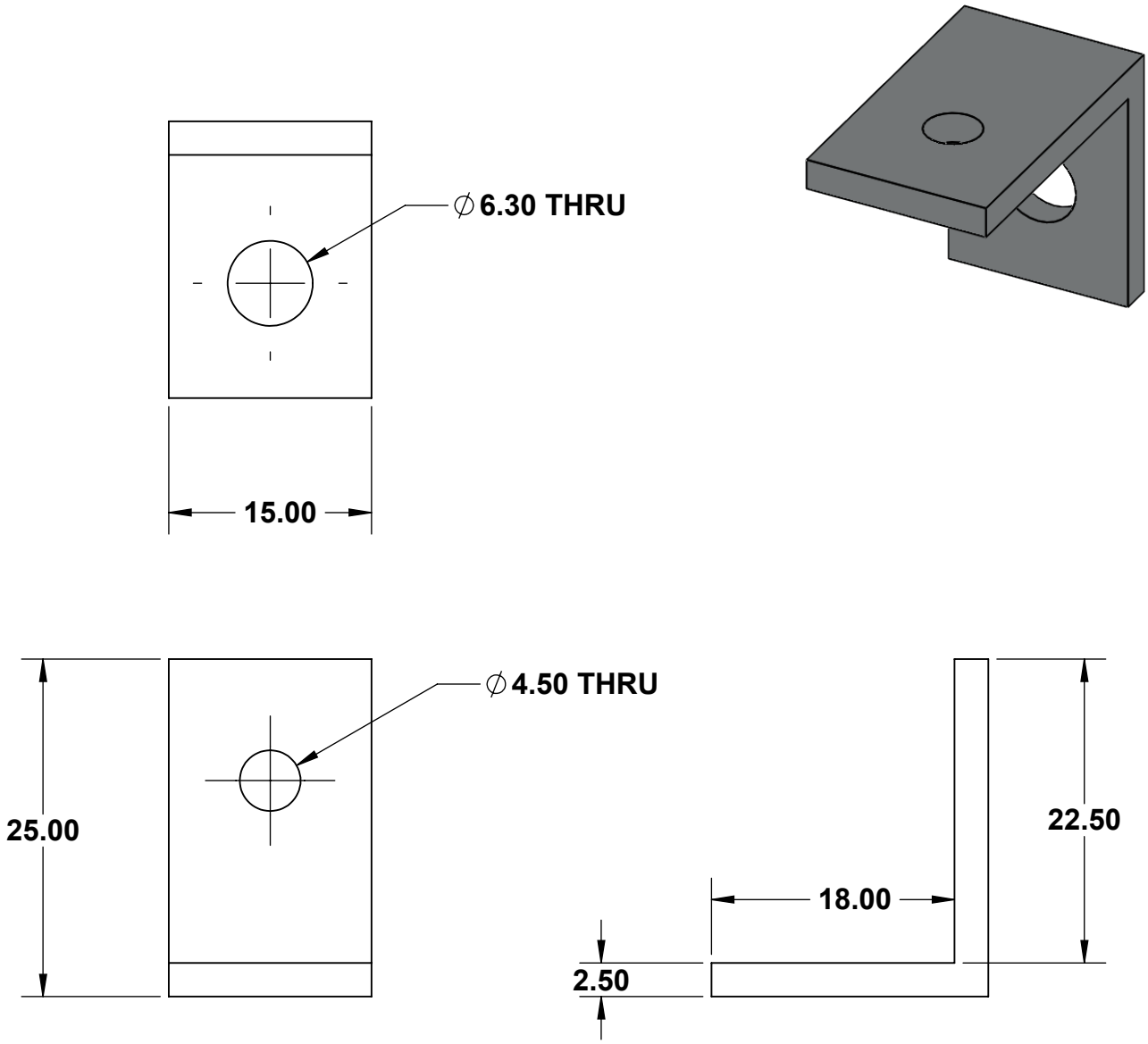

All Dimensions are in mm

Design # 1

SOLIDWORKS Educational Product. For Instructional Use Only.