Payload Body-All Sides

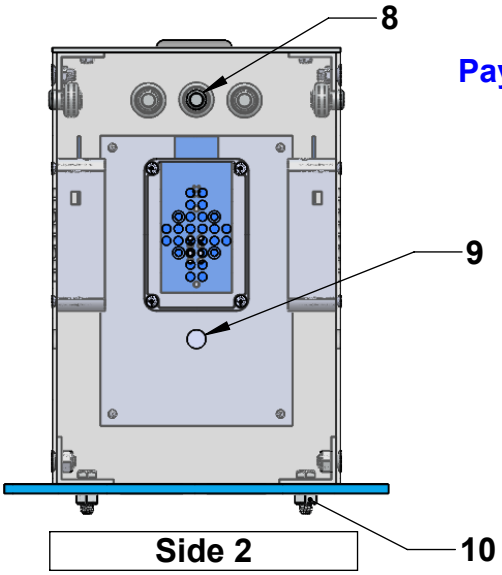

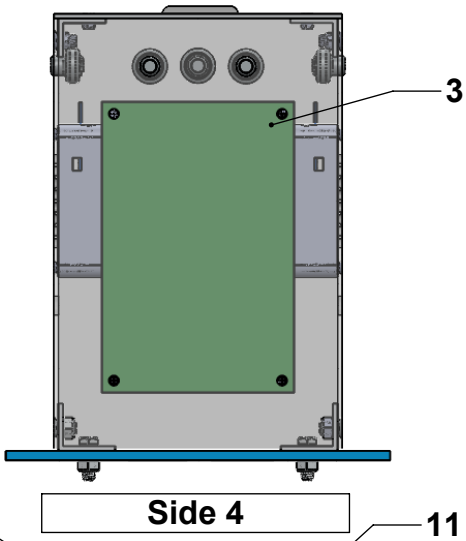

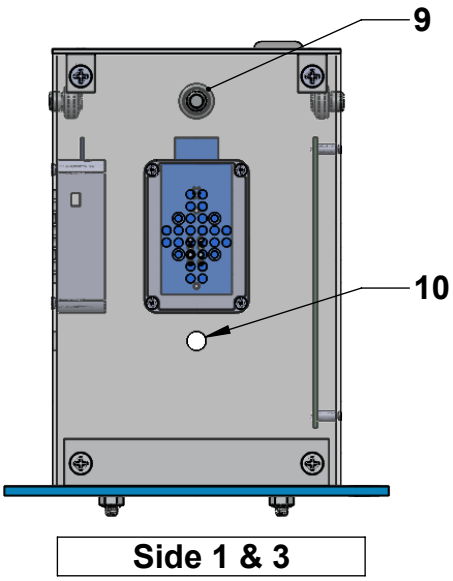

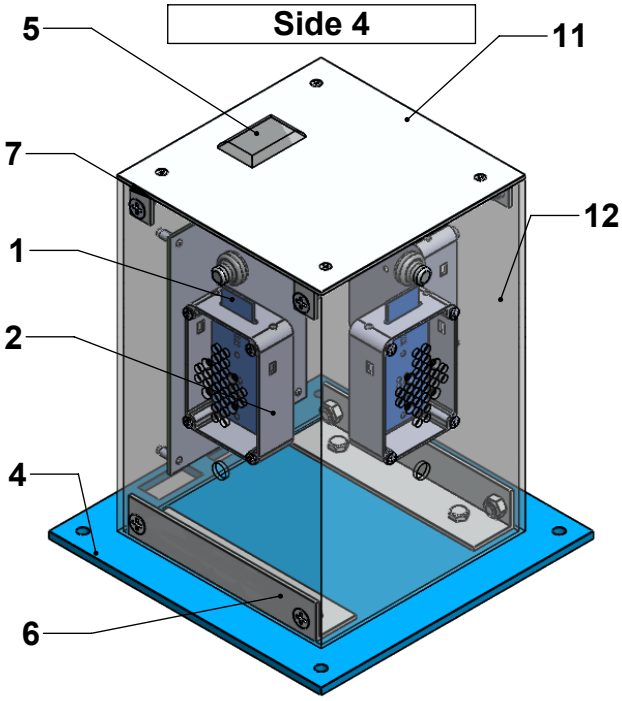

Number	Component
1	Ozone Sensor x3
2	Sensor Case x3
3	Micro Controller
4	HASP Plate
5	GPS Antena
6	L Bracket x2
7	Small L Bracket x4
8	Heater LED x3
9	UV Light Sensor x3
10	Mounting Bolt & Nut x 4
11	Top Plate
12	Payload Body

M6 Bolts & Nuts

SOLIDWORKS Educational Product. For Instructional Use Only.