Ozone Sensor Mount

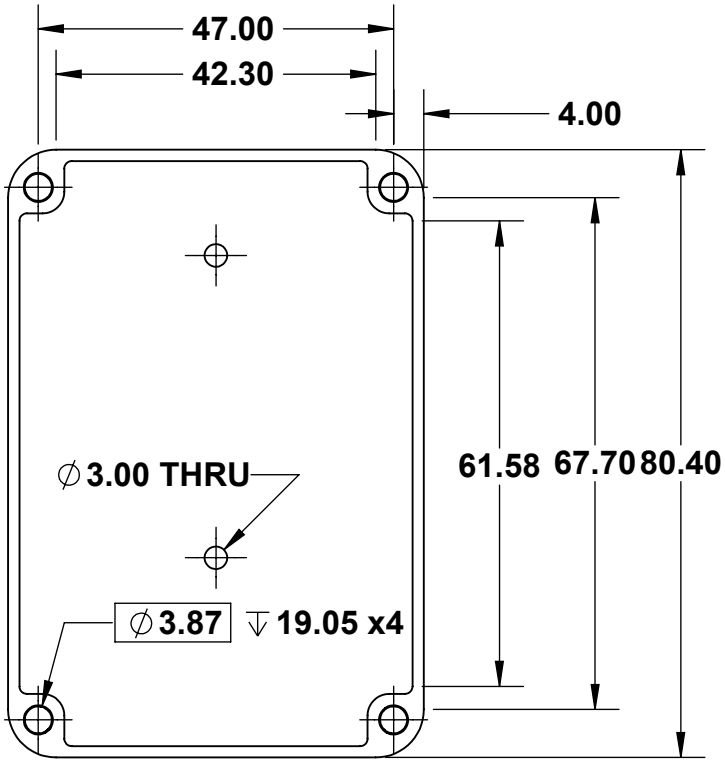

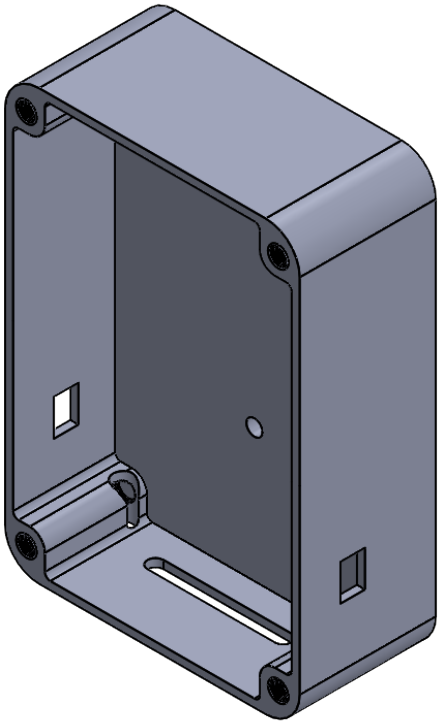

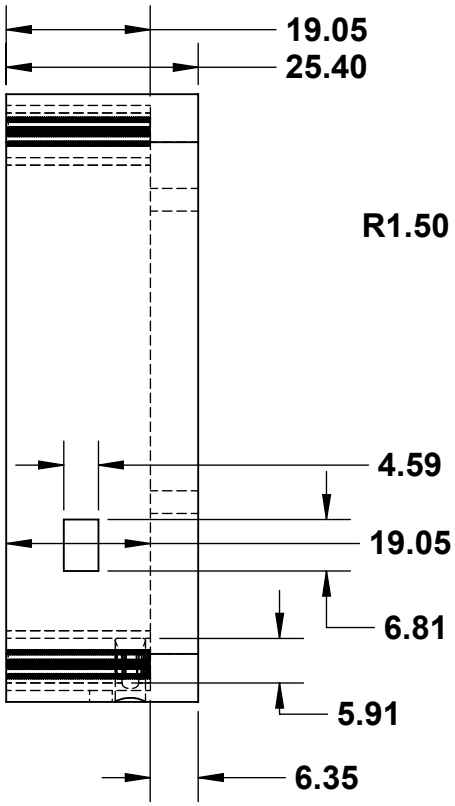

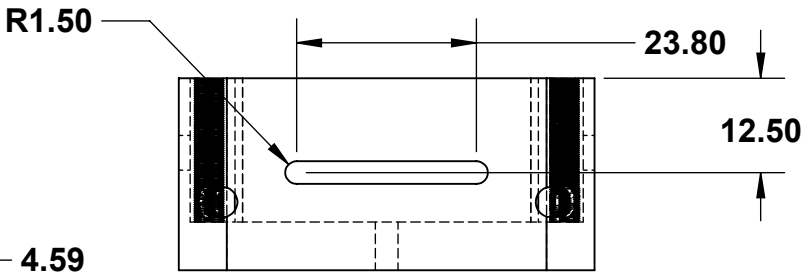

All Dimensions are in mm

Design # 1
Ozone Sensor Mount

SOLIDWORKS Educational Product. For Instructional Use Only.